ZEXEL Ass'y No.	104721-2005
Bosch Ass'y No.	9 460 611 586
Bosch Typecode	
Engine Type	RD28ETI
Manufacturer	NISSAN
Edition date	01.05.09

1 Adjustment conditions

CAT	Designation	Unit	Set value	min.	max.	Actual values	OT
	Test oil		ISO4113orSAEJ967 d				
		1404 Test oil					
P	Test oil temperature	degC	45	45	50		
	Nozzle		105780-0060				
	Bosch type code		NP-DN0SD1510				
	Nozzle holder		105780-2150				
P	Opening pressure	MPa	13	13	13.3		
P	Opening pressure	kgf/cm2	133	133	136		
	Injection pipe		157805-7320				
P	Injection pipe	mm	2-6-450				
		Inside diameter - outside diameter - length (mm)					
	Joint assembly		157641-4720				
	Tube assembly		157641-4020				
P	Transfer pump pressure	kPa	20	20	20		
P	Transfer pump pressure	kgf/cm2	0.2	0.2	0.2		
	Direction of rotation (viewed from drive side)		R				
		Right					

2 Adjustment specification

2.1 Compensation resistor, compensation voltage comparison

Name	Comp. resistor/voltage

A	B	C(ΔUαsoll)
	kΩ	V
1	0.18	0.046
2	0.30	0.037
3	0.43	0.028
4	0.62	0.019
5	0.82	0.009
6	1.10	0
7	1.50	−0.009
8	2.00	−0.019
9	2.70	−0.028
10	3.90	−0.037
11	5.60	−0.046

Compensation resistance/compensation voltage comparison
A = Compensation resistor number
B= Compensation resistance
C = Compensation voltage delta U alpha soll

2.2 Pump chamber pressure

CAT	Designation	Unit	Set value	min.	max.	Actual values	OT
P	Pump speed	r/min	1000	1000	1000		
P	TCV duty (%) F TCV 60Hz	%	100	100	100		
P	U alpha soll	V	2.3	2.3	2.3		
S	Pump chamber pressure	kPa	569	540	598		
S	Pump chamber pressure	kgf/cm2	5.8	5.5	6.1		
P	Basic		*				

CAT	Designation	Unit	Set value	min.	max.	Actual values	OT
P	Pump speed	r/min	100	100	100		
P	TCV duty (%) F TCV 60Hz	%	100	100	100		
P	U alpha soll	V	2.3	2.3	2.3		
C	Pump chamber pressure	kPa	294	294			
C	Pump chamber pressure	kgf/cm2	3	3			

CAT	Designation	Unit	Set value	min.	max.	Actual values	OT
P	Pump speed	r/min	1000	1000	1000		

S = Setting value, C = Check value)
OT = Outside Tolerance (X is set)

Пожалуйста, зарегистрируйте свою копию pdfFactory Pro www.pdffactory.com

P	TCV duty (%) F TCV 60Hz	%	100	100	100		
P	U alpha soll	V	2.3	2.3	2.3		
C	Pump chamber pressure	kPa	569	530	608		
C	Pump chamber pressure	kgf/cm2	5.8	5.4	6.2		

CAT	Designation	Unit	Set value	min.	max.	Actual values	OT
P	Pump speed	r/min	2200	2200	2200		
P	TCV duty (%) F TCV 60Hz	%	100	100	100		
P	U alpha soll	V	2.3	2.3	2.3		
C	Pump chamber pressure	kPa	726	677	775		
C	Pump chamber pressure	kgf/cm2	7.4	6.9	7.9		

2.3 Timer stroke

CAT	Designation	Unit	Set value	min.	max.	Actual values	OT
P	Pump speed	r/min	1000	1000	1000		
P	TCV duty (%) F TCV 60Hz	%	70	70	70		
P	U alpha soll	V	2.3	2.3	2.3		
S	Timer stroke	mm	4.6	4.3	4.9		
P	Basic		*				

CAT	Designation	Unit	Set value	min.	max.	Actual values	OT
P	Pump speed	r/min	500	500	500		
P	TCV duty (%) F TCV 60Hz	%	100	100	100		
P	U alpha soll	V	2.3	2.3	2.3		
C	Timer stroke	mm	6.1	4.1	8.1		

CAT	Designation	Unit	Set value	min.	max.	Actual values	OT
P	Pump speed	r/min	1000	1000	1000		
P	TCV duty (%) F TCV 60Hz	%	100	100	100		
P	U alpha soll	V	2.3	2.3	2.3		
C	Timer stroke	mm	8.1	6.1	10.1		

CAT	Designation	Unit	Set value	min.	max.	Actual values	OT
P	Pump speed	r/min	1000	1000	1000		
P	TCV duty (%) F TCV 60Hz	%	70	70	70		
P	U alpha soll	V	2.3	2.3	2.3		
C	Timer stroke	mm	4.6	4.3	4.9		

CAT	Designation	Unit	Set value	min.	max.	Actual values	OT
P	Pump speed	r/min	1000	1000	1000		
P	TCV duty (%) F TCV 60Hz	%	0	0	0		
P	U alpha soll	V	2.3	2.3	2.3		
C	Timer stroke	mm	0	0	0		

CAT	Designation	Unit	Set value	min.	max.	Actual values	OT
P	Pump speed	r/min	1800	1800	1800		
P	TCV duty (%) F TCV 60Hz	%	100	100	100		
P	U alpha soll	V	2.3	2.3	2.3		
C	Timer stroke	mm	8.95	8.5	9.4		

2.4 Overflow

CAT	Designation	Unit	Set value	min.	max.	Actual values	OT
P	Pump speed	r/min	1000	1000	1000		
P	TCV duty (%) F TCV 60Hz	%	100	100	100		
P	U alpha soll	V	2.3	2.3	2.3		
C	Overflow quantity	cm3/min	520	390	650		

2.5 Fuel injection quantities

CAT	Designation	Unit	Set value	min.	max.	Actual values	OT
P	Pump speed	r/min	1200	1200	1200		
P	U alpha soll + dU alpha soll	V	2.3	2.3	2.3		
P	TCV duty (%) F TCV 60Hz	%	100	100	100		
S	Average injection quantity	mm3/st.	53	52.5	53.5		
S	Difference in delivery	mm3/st.	5.5		5.5		
P	Basic		*				

CAT	Designation	Unit	Set value	min.	max.	Actual values	OT
P	Pump speed	r/min	320	320	320		
P	U alpha soll + dU alpha soll	V	1.9	1.9	1.9		
P	TCV duty (%) F TCV 60Hz	%	100	100	100		
S	Average injection quantity	mm3/st.	11.3	8.3	14.3		
S	Difference in delivery	mm3/st.	2.5		2.5		
P	Basic		*				
	Remarks						

S = Setting value, C = Check value)
OT = Outside Tolerance (X is set)

Пожалуйста, зарегистрируйте свою копию pdfFactory Pro www.pdffactory.com

		Confirmation of difference in delivery					
CAT	**Designation**	**Unit**	**Set value**	**min.**	**max.**	**Actual values**	**OT**
P	Pump speed	r/min	2700	2700	2700		
P	U alpha soll + dU alpha soll	V	1.8	1.8	1.8		
P	TCV duty (%) F TCV 60Hz	%	100	100	100		
S	Average injection quantity	mm3/st.	25.6	23.1	28.1		
S	Difference in delivery	mm3/st.	5.5		5.5		
P	Basic		*				
	Remarks						
		Confirmation of difference in delivery					
CAT	**Designation**	**Unit**	**Set value**	**min.**	**max.**	**Actual values**	**OT**
P	Pump speed	r/min	100	100	100		
P	U alpha soll + dU alpha soll	V	3	3	3		
P	TCV duty (%) F TCV 60Hz	%	100	100	100		
C	Average injection quantity	mm3/st.	51.7	41.7	61.7		
CAT	**Designation**	**Unit**	**Set value**	**min.**	**max.**	**Actual values**	**OT**
P	Pump speed	r/min	290	290	290		
P	U alpha soll + dU alpha soll	V	1.9	1.9	1.9		
P	TCV duty (%) F TCV 60Hz	%	100	100	100		
C	Average injection quantity	mm3/st.	8.5	5.5	11.5		
CAT	**Designation**	**Unit**	**Set value**	**min.**	**max.**	**Actual values**	**OT**
P	Pump speed	r/min	310	310	310		
P	U alpha soll + dU alpha soll	V	1.9	1.9	1.9		
P	TCV duty (%) F TCV 60Hz	%	100	100	100		
C	Average injection quantity	mm3/st.	10.6	7.6	13.6		
CAT	**Designation**	**Unit**	**Set value**	**min.**	**max.**	**Actual values**	**OT**
P	Pump speed	r/min	320	320	320		
P	U alpha soll + dU alpha soll	V	1.9	1.9	1.9		
P	TCV duty (%) F TCV 60Hz	%	100	100	100		
C	Average injection quantity	mm3/st.	11.3	8.3	14.3		
CAT	**Designation**	**Unit**	**Set value**	**min.**	**max.**	**Actual values**	**OT**
P	Pump speed	r/min	600	600	600		
P	U alpha soll + dU alpha soll	V	2	2	2		
P	TCV duty (%) F TCV 60Hz	%	100	100	100		
C	Average injection quantity	mm3/st.	24.1	22.1	26.1		
CAT	**Designation**	**Unit**	**Set value**	**min.**	**max.**	**Actual values**	**OT**
P	Pump speed	r/min	800	800	800		
P	U alpha soll + dU alpha soll	V	1.8	1.8	1.8		
P	TCV duty (%) F TCV 60Hz	%	100	100	100		
C	Average injection quantity	mm3/st.	16.3	14.3	18.3		
CAT	**Designation**	**Unit**	**Set value**	**min.**	**max.**	**Actual values**	**OT**
P	Pump speed	r/min	1200	1200	1200		
P	U alpha soll + dU alpha soll	V	1.8	1.8	1.8		
P	TCV duty (%) F TCV 60Hz	%	100	100	100		
C	Average injection quantity	mm3/st.	21.3	19.3	23.3		
CAT	**Designation**	**Unit**	**Set value**	**min.**	**max.**	**Actual values**	**OT**
P	Pump speed	r/min	1200	1200	1200		
P	U alpha soll + dU alpha soll	V	2.3	2.3	2.3		
P	TCV duty (%) F TCV 60Hz	%	100	100	100		
C	Average injection quantity	mm3/st.	53	52	54		
CAT	**Designation**	**Unit**	**Set value**	**min.**	**max.**	**Actual values**	**OT**
P	Pump speed	r/min	1600	1600	1600		
P	U alpha soll + dU alpha soll	V	1.9	1.9	1.9		
P	TCV duty (%) F TCV 60Hz	%	100	100	100		
C	Average injection quantity	mm3/st.	30.6	28.1	33.1		
CAT	**Designation**	**Unit**	**Set value**	**min.**	**max.**	**Actual values**	**OT**
P	Pump speed	r/min	2000	2000	2000		
P	U alpha soll + dU alpha soll	V	2.19	2.19	2.19		
P	TCV duty (%) F TCV 60Hz	%	100	100	100		
C	Average injection quantity	mm3/st.	47.7	45.7	49.7		
CAT	**Designation**	**Unit**	**Set value**	**min.**	**max.**	**Actual values**	**OT**
P	Pump speed	r/min	2400	2400	2400		
P	U alpha soll + dU alpha soll	V	2	2	2		
P	TCV duty (%) F TCV 60Hz	%	100	100	100		

S = Setting value, C = Check value)
OT = Outside Tolerance (X is set)

Пожалуйста, зарегистрируйте свою копию pdfFactory Pro www.pdffactory.com

C	Average injection quantity	mm3/st.	36.2	33.7	38.7		

CAT	Designation	Unit	Set value	min.	max.	Actual values	OT
P	Pump speed	r/min	2700	2700	2700		
P	U alpha soll + dU alpha soll	V	1.8	1.8	1.8		
P	TCV duty (%) F TCV 60Hz	%	100	100	100		
C	Average injection quantity	mm3/st.	25.6	23.1	28.1		

CAT	Designation	Unit	Set value	min.	max.	Actual values	OT
P	Pump speed	r/min	2700	2700	2700		
P	U alpha soll + dU alpha soll	V	1	1	1		
P	TCV duty (%) F TCV 60Hz	%	100	100	100		
C	Average injection quantity	mm3/st.	3		3		

2.6 Magnet valve OFF

CAT	Designation	Unit	Set value	min.	max.	Actual values	OT
P	Pump speed	r/min	320	320	320		
P	U alpha soll + dU alpha soll	V	1.9	1.9	1.9		
P	TCV duty (%) F TCV 60Hz	%	0	0	0		
C	Average injection quantity	cm3/min	3		3		

CAT	Designation	Unit	Set value	min.	max.	Actual values	OT
P	Pump speed	r/min	320	320	320		
P	U alpha soll + dU alpha soll	V	1.9	1.9	1.9		
P	TCV duty (%) F TCV 60Hz	%	0	0	0		
C	Average injection quantity	cm3/min	7.6		7.6		
	Remarks						
		Each cylinder					

CAT	Designation	Unit	Set value	min.	max.	Actual values	OT
P	Pump speed	r/min	320	320	320		
P	U alpha soll + dU alpha soll	V	3	3	3		
P	TCV duty (%) F TCV 60Hz	%	0	0	0		
C	Average injection quantity	cm3/min	0	0	0		

CAT	Designation	Unit	Set value	min.	max.	Actual values	OT
P	Pump speed	r/min	700	700	700		
P	U alpha soll + dU alpha soll	V	1.75	1.75	1.75		
P	TCV duty (%) F TCV 60Hz	%	100	100	100		
C	Average injection quantity	cm3/min	0	0	0		

CAT	Designation	Unit	Set value	min.	max.	Actual values	OT
P	Pump speed	r/min	2400	2400	2400		
P	U alpha soll + dU alpha soll	V	3.5	3.5	3.5		
P	TCV duty (%) F TCV 60Hz	%	0	0	0		
C	Average injection quantity	cm3/min	0	0	0		

2.7 Confirming NP sensor output

CAT	Designation	Unit	Set value	min.	max.	Actual values	OT
P	Pump speed	r/min	200	200	200		
P	TCV duty (%) F TCV 60Hz	%	100	100	100		
P	U alpha soll	V	2.3	2.3	2.3		
C	Speed output	r/min	N+-8				
		N=Measure the actual speed.					

2.8 Checking fuel temperature sensor

CAT	Designation	Unit	Set value	min.	max.	Actual values	OT
P	Pump speed	r/min	1200	1200	1200		
P	TCV duty (%) F TCV 60Hz	%	100	100	100		
P	U alpha soll	V	2.3	2.3	2.3		
C	Temperature output	degC	T+-5				
		Measure T = actual output temperature					

2.9 Magnet

CAT	Designation	Unit	Set value	min.	max.	Actual values	OT
C	Max. applied voltage	V	8	8	8		
P	Test voltage	V	13	12	14		

3 Assembly dimension

CAT	Designation	Unit	Set value	min.	max.	Actual values	OT
S	K dimension	mm	3.3	3.2	3.4		
S	KF dimension	mm	6.93	6.83	7.03		
S	Pre-stroke	mm	0.2	0.18	0.22		

S = Setting value, C = Check value)
OT = Outside Tolerance (X is set)

Пожалуйста, зарегистрируйте свою копию pdfFactory Pro www.pdffactory.com

4 Attachments' specification

4.1 Attachment specification 1

Name	HARNESS & CONNECTOR

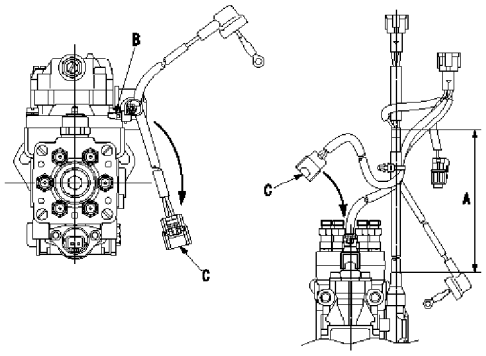

T.C.V. connector assembly specification
(1)Ensure the GE harness is not twisted at section A.
(2)Refer to diagram for direction of binder B.
(3)Route the TCV harness in the direction indicated by the arrows in the figure and install the con nector C.

4.2 Attachment specification 2

Name	HARNESS & CONNECTOR

a=75deg
L1=68mm
L2=Max.33.5mm

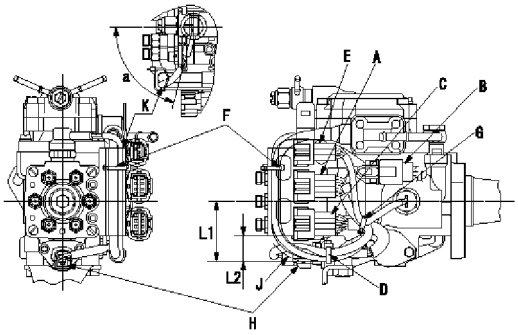

Connector and binder assembly specification
(1)Assemble the connectors and clips in the order A, B, C, D, E, F and G.
(2)At clip position F (at the bracket hole) clip the F.C.V. harness and the G.E. cable, paying atten tion to the clip's installation direction.
(3)Ensure the harness slack at J does not exceed L1.
(4)At K, the protective tube and the bracket must contact so that the FCV harness does not direc tly contact the bracket.
(5)Clip the GE (sub, main), the FCV, the TCV and the P/U harnesses using clip G.
A:F.C.V., Q adjustment connector
B:Q adjustment resistor
C:G.E. Connector
D:Push type clip
E:P/U Connector
F:Clip position (bracket hole)
G:Binder
H:T.C.V. Connector

Пожалуйста, зарегистрируйте свою копию pdfFactory Pro www.pdffactory.com