ZEXEL
COMPONENTS

Date: 31.07.14
Time: 01:11:24

+ INJECTION-PUMP ASSEMBLY	104740-1131			
Manufacturer No.:				
- FUEL-INJECTION PUMP	104640-1022	9 461 611 297		
- NUMBER PLATE	146639-5100			
-				
-				
-				
- NOZZLE AND HOLDER ASSY.	105151-1580	9 430 610 032	81-3220	
Nozzle and Holder:	8-94119-820-0			
Open Pre:MPa(Kgf/cm2):	13.2{135}			
- NOZZLE-HOLDER	105081-3220	9 430 615 028		
- NOZZLE	105000-1740	9 432 610 003	NP-DN0SD193	

104740 – 1131

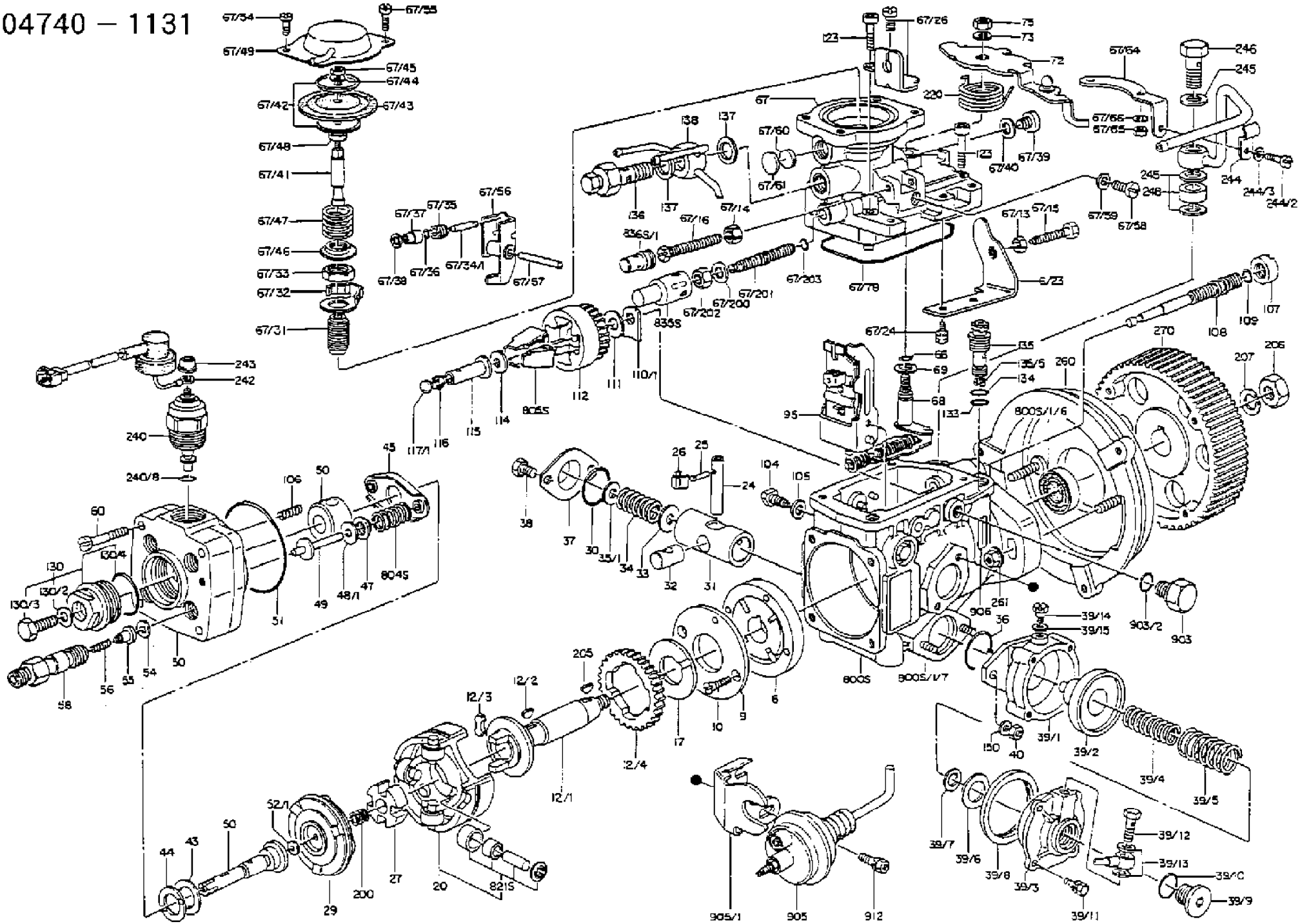
67/54
67/55
67/49
67/45
67/44
67/42
67/43
67/48
67/41
67/47
67/46
67/33
67/32
67/31
67/37
67/35
67/56
67/38
67/36
67/34/1
67/57
67/26
123
75
73
72
220
67/64
246
245
67
67/60
67/61
138
137
136
67/14
67/16
836S/1
67/203
67/201
67/200
67/202
835S
67/78
67/40
67/39
67/66
67/65
244
244/3
244/2
248
67/59
67/58
67/13
67/15
6/23
107
108
109
270
206
207
260
135
135/5
134
133
67/24
66
69
68
95
800S/1/6
243
242
240
240/8
117/1
116
115
114
805S
112
111
110/1
45
106
50
60
130
130/4
130/2
130/3
51
49
48/1
47
804S
58
56
55
54
50
26
25
24
104
105
38
37
30
35/1
34
33
32
31
261
906
36
39/14
39/15
903/2
903
800S
800S/1/7
205
12/2
12/3
12/4
12/1
17
10
9
6
150
40
39/1
39/2
39/4
39/5
52/1
50
44
43
29
200
27
20
821S
905/1
905
912
39/7
39/6
39/8
39/3
39/11
39/12
39/13
39/10
39/9

Product: 104740-1131 INJECTION-PUMP ASSEMBLY

Item	ZEXEL No.	BOSCH No.	Info	Piece	Designation
1/6	146601-0100	9 461 610 432		1	PACKING RING
6	146100-0120	9 461 610 089		1	SUPPLY PUMP:D20
9	146103-0000	9 461 610 090		1	COVER
10	139104-0000	9 411 610 049		2	FLAT-HEAD SCREW
12/1	146200-0300	9 461 610 104		1	DRIVE SHAFT
12/2	146201-0000	9 461 610 107		1	WOODRUFF KEY
12/3	146202-0001	9 461 610 108		2	DAMPER
12/4	146203-0000	9 461 610 110		1	TOOTHED GEAR
17	146204-0000	9 461 610 111		1	PLAIN WASHER
20	146210-0120	9 461 610 115		1	ROLLER SET:MMC C=1.2
24	146303-0000	9 461 610 147		1	BEARING PIN
25	146304-0000	9 461 610 148		1	BEARING PIN
26	146305-0000	9 461 610 149		1	CLAMPING BAND
27	146205-0000	9 461 610 112		1	SLOTTED WASHER
29	146220-0020	9 461 610 119		1	CAM PLATE:'00'SK3277
30	146600-0800	9 461 610 421		1	O-RING
31	146300-1800	9 461 611 148		1	PUMP PLUNGER
32	146301-0000	9 461 610 138		1	SLIDING PIECE
33	146603-0700	9 461 610 447		1	SHIM
34	146302-1000	9 461 610 146		1	COMPRESSION SPRING:K=1.9
35/1	146603-0700	9 461 610 447	A	1	SHIM
35/1	146603-0800	9 461 610 448	A	1	SHIM
35/1	146603-0900	9 461 610 449	A	1	SHIM
35/1	146603-1000	9 461 610 450	A	1	SHIM
35/1	146603-1100	9 461 610 451	A	1	SHIM
35/1	146603-3600	9 461 610 452	A	1	SHIM
36	146600-0800	9 461 610 421		1	O-RING
37	146310-0000	9 461 610 150		1	COVER
38	139106-0000	9 411 610 050		2	FLAT-HEAD SCREW
39	146340-1320	9 461 611 150		1	START ADVANCE ASSY
39/1	146342-1900	9 461 611 152		1	DIAPHRAGM HOUSING
39/2	146342-3420	9 461 611 153		1	PUMP PLUNGER
39/3	146342-1300	9 461 611 151		1	COVER
39/4	146342-1600	9 461 610 160		1	COILED SPRING
39/5	146342-1700	9 461 610 161		1	COILED SPRING
39/6	146342-0600	9 461 610 155		1	PLAIN WASHER
39/7/1	146603-0700	9 461 610 447	A	1	SHIM
39/7/1	146603-0800	9 461 610 448	A	1	SHIM
39/7/1	146603-0900	9 461 610 449	A	1	SHIM
39/7/1	146603-1000	9 461 610 450	A	1	SHIM
39/7/1	146603-1100	9 461 610 451	A	1	SHIM
39/7/1	146603-3600	9 461 610 452	A	1	SHIM
39/8	146342-0700	9 461 610 156		1	O-RING
39/9	146342-1400	9 461 610 158		1	GASKET
39/10	010065-1670	9 442 610 002		4	BLEEDER SCREW
39/11	014020-5140	9 442 610 017		4	PLAIN WASHER
39/12	029730-6030	9 442 610 149		1	EYE BOLT
39/13	026506-1040	9 421 617 011		2	GASKET
39/14	131420-0400	9 411 610 043		1	BLEEDER SCREW
39/15	026506-1040	9 421 617 011		1	GASKET
40	013020-6040	9 442 610 010		2	UNION NUT
43	146230-0000	9 461 610 123		1	SHIM
44	146230-0100	9 461 610 124		1	PLAIN WASHER
45	146231-0000	9 461 610 125		1	SLOTTED WASHER
47	146233-0000	9 461 610 128		2	SLOTTED WASHER
48/1	146603-0000	9 461 610 440	A	1	SHIM
48/1	146603-0100	9 461 610 441	A	1	SHIM
48/1	146603-0200	9 461 610 442	A	1	SHIM
48/1	146603-0300	9 461 610 443	A	1	SHIM
48/1	146603-0400	9 461 610 444	A	1	SHIM
48/1	146603-0500	9 461 610 445	A	1	SHIM
48/1	146603-0600	9 461 610 446	A	1	SHIM
48/1	146690-1400	9 461 611 329	A	1	SHIM

48/1	146690-1500	9 461 611 330	A	1	SHIM
48/1	146690-1600	9 461 611 331	A	1	SHIM
48/1	146690-1700	9 461 611 332	A	1	SHIM
48/1	146690-1800	9 461 611 333	A	1	SHIM
48/1	146690-1900	9 461 611 334	A	1	SHIM
49	146234-0020	9 461 610 129		2	GUIDE PIN
50	146400-5720	9 461 611 157		1	HYDRAULIC HEAD:D10 2X4.0 A0
51	146600-0000	9 461 610 413		1	O-RING
52/1	146420-0000	9 461 610 177	A	1	SHIM
52/1	146420-0100	9 461 610 178	A	1	SHIM
52/1	146420-0200	9 461 610 179	A	1	SHIM
52/1	146420-0300	9 461 610 180	A	1	SHIM
52/1	146420-0400	9 461 610 181	A	1	SHIM
52/1	146420-0500	9 461 610 182	A	1	SHIM
52/1	146420-0600	9 461 610 183	A	1	SHIM
52/1	146420-0700	9 461 610 184	A	1	SHIM
52/1	146420-0800	9 461 610 185	A	1	SHIM
52/1	146420-0900	9 461 610 186	A	1	SHIM
52/1	146420-1000	9 461 610 187	A	1	SHIM
52/1	146420-1100	9 461 610 188	A	1	SHIM
52/1	146420-1200	9 461 610 189	A	1	SHIM
52/1	146420-1300	9 461 610 190	A	1	SHIM
52/1	146420-1400	9 461 610 191	A	1	SHIM
52/1	146420-1500	9 461 610 192	A	1	SHIM
52/1	146420-1600	9 461 610 193	A	1	SHIM
52/1	146420-1700	9 461 610 194	A	1	SHIM
52/1	146420-1800	9 461 610 195	A	1	SHIM
52/1	146420-1900	9 461 610 196	A	1	SHIM
52/1	146420-2000	9 461 610 197	A	1	SHIM
52/1	146420-2100	9 461 610 198	A	1	SHIM
52/1	146420-2200	9 461 610 199	A	1	SHIM
52/1	146420-2300	9 461 610 200	A	1	SHIM
52/1	146420-2400	9 461 610 201	A	1	SHIM
52/1	146420-2500	9 461 610 202	A	1	SHIM
52/1	146420-2600	9 461 610 203	A	1	SHIM
52/1	146420-2700	9 461 610 204	A	1	SHIM
52/1	146420-2800	9 461 610 205	A	1	SHIM
52/1	146420-2900	9 461 610 206	A	1	SHIM
52/1	146420-3000	9 461 610 207	A	1	SHIM
52/1	146420-3100	9 461 610 208	A	1	SHIM
52/1	146420-3200	9 461 610 209	A	1	SHIM
52/1	146420-3300	9 461 610 210	A	1	SHIM
52/1	146420-3400	9 461 610 211	A	1	SHIM
52/1	146420-3500	9 461 610 212	A	1	SHIM
52/1	146420-3600	9 461 610 213	A	1	SHIM
52/1	146420-3700	9 461 610 214	A	1	SHIM
52/1	146420-3800	9 461 610 215	A	1	SHIM
52/1	146420-3900	9 461 610 216	A	1	SHIM
52/1	146420-4000	9 461 610 217	A	1	SHIM
52/1	146420-4100	9 461 610 218	A	1	SHIM
52/1	146420-4200	9 461 610 219	A	1	SHIM
52/1	146420-4300	9 461 610 220	A	1	SHIM
52/1	146420-4400	9 461 610 221	A	1	SHIM
52/1	146420-4500	9 461 610 222	A	1	SHIM
52/1	146420-4600	9 461 610 223	A	1	SHIM
52/1	146420-4700	9 461 610 224	A	1	SHIM
52/1	146420-4800	9 461 610 225	A	1	SHIM
52/1	146420-4900	9 461 610 226	A	1	SHIM
52/1	146420-5000	9 461 610 227	A	1	SHIM
52/1	146420-5100	9 461 610 228	A	1	SHIM
52/1	146420-5200	9 461 610 229	A	1	SHIM
52/1	146420-5300	9 461 610 230	A	1	SHIM
52/1	146420-5400	9 461 610 231	A	1	SHIM
52/1	146420-5500	9 461 610 232	A	1	SHIM
52/1	146420-5600	9 461 610 233	A	1	SHIM
52/1	146420-5700	9 461 610 234	A	1	SHIM
52/1	146420-5800	9 461 610 235	A	1	SHIM
54	146433-0100	9 461 610 239		4	GASKET
55	146430-0120	9 413 610 008		4	DELIVERY-VALVE ASSEMBLY:'VE2' VR25

56	146432-0000	9 461 610 238		4	COMPRESSION SPRING:K=0.48
58	146440-0120	9 461 610 240		4	FITTING:D0.45 L=55
60	139106-0100	9 411 610 051		4	FLAT-HEAD SCREW
66	146600-0100	9 461 610 414		1	O-RING
67	146702-0022	9 461 611 299		1	MANIFOLD-PRESSURE COMP.
67/1	146508-0620	9 461 611 160		1	GOVERNOR COVER
67/13	013020-6040	9 442 610 010		1	UNION NUT
67/14	029240-6010	9 442 610 059		1	UNION NUT
67/15	146526-1800	9 461 610 276		1	BLEEDER SCREW
67/16	146526-1000	9 461 610 273		1	FLAT-HEAD SCREW
67/23	146625-8600	9 461 611 199		1	BRACKET
67/24	010506-1640	9 442 610 296		2	FLAT-HEAD SCREW
67/26	146625-8720	9 461 611 200		1	BRACKET
67/31	146710-0800	9 461 611 236		1	BUSHING
67/32	146711-0000	9 461 610 554		1	PLATE
67/33	139218-0400	9 411 610 060		1	UNION NUT
67/34	146712-0700	9 461 611 031		1	BEARING PIN:15.5Я
67/35	146621-0300	9 461 610 502		1	UNION NUT
67/36	146600-1400	9 461 610 426		1	O-RING
67/37	146710-0100	9 461 610 553		1	BUSHING
67/38	139506-0200	9 411 610 073		1	GASKET
67/39	146620-0300	9 461 610 498		1	CAPSULE
67/40	026512-1540	9 442 610 044		1	GASKET
67/41	146713-0400	9 461 610 557		1	ADJUSTING PIN
67/42	146714-0000	9 461 610 558		2	PLATE
67/43	146715-0000	9 461 610 559		1	DIAPHRAGM
67/44	139306-0100	9 411 610 061		1	LOCKING WASHER
67/45	013030-6040	9 442 610 012		1	UNION NUT
67/46	146716-0000	9 461 610 560		1	UNION NUT
67/47	146717-1100	9 461 611 254		1	COILED SPRING:K=1.4 L=22
67/48/1	146720-0000	9 461 610 563	A	1	SPACER BUSHING
67/48/1	146720-0100	9 461 610 564	A	1	SPACER BUSHING
67/48/1	146720-0200	9 461 610 565	A	1	SPACER BUSHING
67/48/1	146720-0300	9 461 610 566	A	1	SPACER BUSHING
67/48/1	146720-0400	9 461 610 567	A	1	SPACER BUSHING
67/48/1	146720-0500	9 461 610 568	A	1	SPACER BUSHING
67/48/1	146720-0600	9 461 610 569	A	1	SPACER BUSHING
67/48/1	146720-0700	9 461 610 570	A	1	SPACER BUSHING
67/48/1	146720-0800	9 461 610 571	A	1	SPACER BUSHING
67/48/1	146720-0900	9 461 610 572	A	1	SPACER BUSHING
67/48/1	146720-1000	9 461 610 573	A	1	SPACER BUSHING
67/48/1	146720-1100	9 461 610 574	A	1	SPACER BUSHING
67/48/1	146720-1200	9 461 610 575	A	1	SPACER BUSHING
67/48/1	146720-1300	9 461 610 576	A	1	SPACER BUSHING
67/48/1	146720-1400	9 461 610 577	A	1	SPACER BUSHING
67/48/1	146720-1500	9 461 610 578	A	1	SPACER BUSHING
67/48/1	146720-1600	9 461 610 579	A	1	SPACER BUSHING
67/48/1	146720-1700	9 461 610 580	A	1	SPACER BUSHING
67/48/1	146720-1800	9 461 610 581	A	1	SPACER BUSHING
67/48/1	146720-1900	9 461 610 582	A	1	SPACER BUSHING
67/48/1	146720-2000	9 461 610 583	A	1	SPACER BUSHING
67/48/1	146720-2100	9 461 610 584	A	1	SPACER BUSHING
67/48/1	146720-2200	9 461 610 585	A	1	SPACER BUSHING
67/48/1	146720-2300	9 461 610 586	A	1	SPACER BUSHING
67/48/1	146720-2400	9 461 610 587	A	1	SPACER BUSHING
67/48/1	146720-2500	9 461 610 588	A	1	SPACER BUSHING
67/48/1	146720-2600	9 461 610 589	A	1	SPACER BUSHING
67/48/1	146720-2700	9 461 610 590	A	1	SPACER BUSHING
67/48/1	146720-2800	9 461 610 591	A	1	SPACER BUSHING
67/48/1	146720-2900	9 461 610 592	A	1	SPACER BUSHING
67/48/1	146720-4500	9 461 611 033	A	1	SPACER BUSHING:BCS L=1.8
67/48/1	146720-4600	9 461 611 034	A	1	SPACER BUSHING:BCS L=1.9
67/48/1	146720-4700	9 461 611 035	A	1	SPACER BUSHING:BCS L=2.0
67/48/1	146720-4800	9 461 611 036	A	1	SPACER BUSHING:BCS L=2.1
67/48/1	146720-4900	9 461 611 037	A	1	SPACER BUSHING:BCS L=2.2
67/48/1	146720-5000	9 461 611 038	A	1	SPACER BUSHING:BCS L=2.3
67/48/1	146720-5100	9 461 611 039	A	1	SPACER BUSHING:BCS L=2.4
67/48/1	146720-5200	9 461 611 040	A	1	SPACER BUSHING:BCS L=2.5
67/48/1	146720-5300	9 461 611 041	A	1	SPACER BUSHING:BCS L=2.6

67/49	146721-1620	9 461 611 300		1	COVER
67/54	139106-0300	9 411 610 053		2	FLAT-HEAD SCREW
67/55	139106-0000	9 411 610 050		2	FLAT-HEAD SCREW
67/56	146723-0200	9 461 611 259		1	CONTROL LEVER
67/57	146712-0100	9 461 610 556		1	BEARING PIN
67/58	146620-0600	9 461 610 500		2	CAPSULE
67/59	026506-1040	9 421 617 011		2	GASKET
67/60	146724-0300	9 461 611 260		1	ELEMENT
67/61	146724-0600	9 461 611 262		1	CAPSULE
67/64	146613-8400	9 461 611 193		1	BRACKET
67/65	013020-6040	9 442 610 010		2	UNION NUT
67/66	014110-6440	9 442 610 020		2	LOCKING WASHER
67/78	146600-1000	9 461 610 422		1	SEAL RING
68	146510-4620	9 461 611 162		1	CONTROL SHAFT:R= 8.5 S L
69	139310-0200	9 411 610 065		1	PLAIN WASHER
72	146533-7720	9 461 611 167	A	1	CONTROL LEVER
72B	146533-7820	9 461 611 168	A	1	CONTROL LEVER
72C	146533-9720	9 461 611 171	A	1	CONTROL LEVER
73	014110-6440	9 442 610 020		1	LOCKING WASHER
75	013020-6040	9 442 610 010		1	UNION NUT
87	139308-0300	9 411 610 063		1	PLAIN WASHER
88	146545-0300	9 461 610 321	A	1	THREADED PIN
88B	146545-0400	9 461 610 322	A	1	THREADED PIN
88C	146545-0500	9 461 610 323	A	1	THREADED PIN
90	139208-0100	9 411 610 058		1	UNION NUT
91	146600-1200	9 461 610 424		1	O-RING
95	146551-0220	9 461 611 074		1	FULCRUM LEVER:I=2.2
104	146568-0000	9 461 610 342		2	SLOTTED SPRING PIN
105	026508-1140	0 986 613 069		2	GASKET
106	146588-0000	9 461 610 412		2	COILED SPRING
107	146569-0100	9 461 610 344		1	UNION NUT
108	146570-0000	9 461 610 345		1	GOVERNOR SHAFT:L
109	146600-0400	9 461 610 417		1	O-RING
110/1	146571-0000	9 461 610 348	A	1	SHIM
110/1	146571-0100	9 461 610 349	A	1	SHIM
110/1	146571-0200	9 461 610 350	A	1	SHIM
110/1	146571-0300	9 461 610 351	A	1	SHIM
110/1	146571-0400	9 461 610 352	A	1	SHIM
110/1	146571-0500	9 461 610 353	A	1	SHIM
110/1	146571-0600	9 461 610 354	A	1	SHIM
110/1	146571-0700	9 461 610 355	A	1	SHIM
110/1	146571-0800	9 461 610 356	A	1	SHIM
111	146602-0600	9 461 610 437		1	PLAIN WASHER
112	146572-0020	9 461 610 357		1	FLYWEIGHT ASSEMBLY
114	146602-0500	9 461 610 436		1	PLAIN WASHER
115	146575-0000	9 461 610 359		1	SLIDING SLEEVE:D2.0
116	146576-0000	9 461 610 364		1	SEALING CAP
117/1	146577-0000	9 461 610 365	A	1	PLUG
117/1	146577-0100	9 461 610 366	A	1	PLUG
117/1	146577-0200	9 461 610 367	A	1	PLUG
117/1	146577-0300	9 461 610 368	A	1	PLUG
117/1	146577-0400	9 461 610 369	A	1	PLUG
117/1	146577-0500	9 461 610 370	A	1	PLUG
117/1	146577-0600	9 461 610 371	A	1	PLUG
117/1	146577-0700	9 461 610 372	A	1	PLUG
117/1	146577-0800	9 461 610 373	A	1	PLUG
117/1	146577-0900	9 461 610 374	A	1	PLUG
117/1	146577-1000	9 461 610 375	A	1	PLUG
117/1	146577-1100	9 461 610 376	A	1	PLUG
117/1	146577-1200	9 461 610 377	A	1	PLUG
117/1	146577-1300	9 461 610 378	A	1	PLUG
117/1	146577-1400	9 461 610 379	A	1	PLUG
117/1	146577-1500	9 461 610 380	A	1	PLUG
117/1	146577-1600	9 461 610 381	A	1	PLUG
117/1	146577-1700	9 461 610 382	A	1	PLUG
117/1	146577-5000	9 461 611 384	A	1	PLUG
117/1	146577-5100	9 461 611 385	A	1	PLUG
117/1	146577-5200	9 461 611 386	A	1	PLUG
117/1	146577-5300	9 461 611 387	A	1	PLUG

117/1	146577-5400	9 461 611 388	A	1	PLUG
117/1	146577-5500	9 461 611 389	A	1	PLUG
117/1	146577-5600	9 461 611 390	A	1	PLUG
117/1	146577-5700	9 461 611 391	A	1	PLUG
117/1	146577-5800	9 461 611 392	A	1	PLUG
117/1	146577-5900	9 461 611 393	A	1	PLUG
117/1	146577-6000	9 461 611 394	A	1	PLUG
117/1	146577-6100	9 461 611 395	A	1	PLUG
117/1	146577-6200	9 461 611 396	A	1	PLUG
117/1	146577-6300	9 461 611 397	A	1	PLUG
117/1	146577-6400	9 461 611 398	A	1	PLUG
117/1	146577-6500	9 461 611 399	A	1	PLUG
117/1	146577-6600	9 461 611 400	A	1	PLUG
123	146620-0500	9 461 610 499		4	HEX-SOCKET-HEAD CAP SCREW
130	146421-0020	9 461 610 236		1	CAPSULE:D14
130/2	026508-1140	0 986 613 069		1	GASKET
130/3	146422-0000	9 461 610 237		1	BLEEDER SCREW
130/4	146600-0500	9 461 610 418		1	O-RING
133	146600-0600	9 461 610 419		1	O-RING
134	146600-0700	9 461 610 420		1	O-RING
135	146110-0220	9 461 610 091	A	1	CONTROL VALVE:'02'4XD1.6K=1.
135/5	146114-0000	9 461 610 094		1	SPRING WASHER
135B	146110-1020	9 461 611 147	A	1	CONTROL VALVE:'10'4XD1.6K=1.
135B/5	146114-0000	9 461 610 094		1	SPRING WASHER
136	146120-0120	9 461 610 096		1	OVER FLOW VALVE
137	026512-1840	9 442 610 045		2	GASKET
138	146606-2820	9 461 611 182		1	INLET UNION:OUT B1 B1
150	014020-6140	9 442 610 018		2	PLAIN WASHER
151	139010-0300	9 411 610 048		2	STUD
200	146206-0100	9 461 610 113		1	COILED SPRING
205	025804-1610	9 442 610 040		1	WOODRUFF KEY
206	013121-4140	9 411 617 077		1	UNION NUT
207	029321-4050	9 442 610 119		1	LOCKING WASHER
220	146587-1100	9 461 610 406		1	COILED SPRING
239	023500-5140	9 442 610 035		1	PLAIN WASHER
240	146650-1220	9 461 610 533		1	PULLING ELECTROMAGNET
240/8	146600-1700	9 461 610 427		1	O-RING
242	146658-0210	9 461 610 535		1	WIRE
243	013020-5240	9 442 610 009		1	UNION NUT
244	146613-5620	9 461 611 191		1	PLATE
245	026512-1840	9 442 610 045		3	GASKET
246	146125-0020	9 461 610 099		1	EYE BOLT
247	146610-8620	9 461 611 188		1	INLET UNION:IN B3
248	146614-0200	9 461 610 481		1	SPACER BUSHING
260	146611-0021	9 461 611 189		1	BRACKET
261	146621-0900	9 461 611 198		2	UNION NUT
270	146615-0900	9 461 611 194		1	TIMER CORE
800S	146009-4120	9 461 611 146		1	PUMP HOUSING
800S/1/6	146601-0100	9 461 610 432		1	PACKING RING
800S/1/7	139010-0300	9 411 610 048		2	STUD
804S	146232-0220	9 461 610 126		1	COMPRESSION SPRING
805S	146574-0120	9 461 610 358		1	PARTS SET
810S	146600-1120	9 461 610 423		1	REPAIR SET
811S	146600-1820	9 461 610 428		1	PARTS SET
812S	146600-1920	9 461 610 429		1	PARTS SET
903	146620-0120	9 461 610 496		1	CAPSULE
903/2	146600-1300	9 461 610 425		1	O-RING
905	593175-2221	9 443 610 005		1	ADJUSTING DEVICE
905/1	593174-2301	9 443 610 004		1	BRACKET
906	146639-5100			1	NUMBER PLATE
912	020146-1240	9 442 610 318		2	BLEEDER SCREW